DWG. NO. DM / 2020 / KD / 290, RF / STR / WD / 01

SCHEDULE OF FLOOR & ROOF BEAMS

BEAM MARKING	SIZE	REINFORCEMENT AT SUPPORT	REINFORCEMENT AT MID-SPAN
B1	250 x 550	3 x 20 ϕTOP 3 x 20 ϕBOTTOM 8 ϕ@ 150 C/C	3 x 20 ϕTOP 3 x 20 ϕBOTTOM 8 ϕ@ 150 C/C
B2	250 x 450	3 x 20 ϕTOP 3 x 20 ϕBOTTOM 8 ϕ@ 150 C/C	3 x 20 ϕTOP 3 x 20 ϕBOTTOM 8 ϕ@ 150 C/C
B3	250 x 450	3 x 16 ϕTOP 2 x 16 ϕBOTTOM 8 ϕ @ 150 C/C	2 x 16 ϕTOP 2 x 16 ϕBOTTOM 8 ϕ @ 150 C/C
B4	250 x 450	2 x 16 ϕTOP 2 x 16 ϕBOTTOM 8 ϕ @ 150 C/C	2 x 16 ϕTOP 2 x 16 ϕBOTTOM 8 ϕ @ 150 C/C
B5	150 x 450	2 x 12 ϕTOP 2 x 12 ϕBOTTOM 8 ϕ @ 150 C/C	2 x 12 ϕTOP 2 x 12 ϕBOTTOM 8 ϕ @ 150 C/C
B6	250 x 550	4 x 20 ϕTOP 4 x 20 ϕBOTTOM (IN TWO LAYER) 8 ϕ @ 150 C/C	4 x 20 ϕTOP 4 x 20 ϕBOTTOM (IN TWO LAYER) 8 ϕ @ 150 C/C
B7	250 x 450	2 x 20 ϕTOP 2 x 20 ϕBOTTOM 8 ϕ @ 150 C/C	2 x 20 ϕTOP 2 x 20 ϕBOTTOM 8 ϕ @ 150 C/C
WB1	500 x 400	5 x 16 ϕTOP 5 x 16 ϕBOTTOM 8 ϕ- 4L @ 150 C/C	5 x 16 ϕTOP 5 x 16 ϕBOTTOM 8 ϕ- 4L @ 150 C/C

SCHEDULE OF R.C.C. TIE BEAMS

FLOOR BEAM MARKING	SIZE	LOCATION	REINFORCEMENT AT SUPPORT	REINFORCEMENT AT MID-SPAN
TB	350 x 400	Top	3 x 16 ϕ	3 x 16 ϕ
		Bottom	3 x 16 ϕ	3 x 16 ϕ
		Slps	8 ϕ@ 150 C/C	8 ϕ@ 150 C/C

SCHEDULE OF R.C.C. COLUMNS

COLUMN MARKING	SIZE	UP TO 1ST.FLOOR LEV. + LAP LENGTH	UP TO 2ND FLOOR LEV. + LAP LENGTH	UP TO ROOF LEV. + LAP LENGTH	ABOVE ROOF LEV. (where ever is applicable)
C1, C2,C3, C5, C6, C8	300 x 500	10 x 20 ϕ 500 300 8 ϕ@ 200 C/C	8 x 20 ϕ 500 300 8 ϕ@ 200 C/C	4 x 20 ϕ + 4 x 16 ϕ 500 300 8 ϕ@ 200 C/C	8 x 12 ϕ 500 300 8 ϕ@ 200 C/C
C4	350 x 500	10 x 20 ϕ 500 300 8 ϕ@ 200 C/C	8 x 20 ϕ 500 300 8 ϕ@ 200 C/C	4 x 20 ϕ + 4 x 16 ϕ 500 300 8 ϕ@ 200 C/C	8 x 12 ϕ 500 300 8 ϕ@ 200 C/C
C7	300 x 600	12 x 20 ϕ 600 300 8 ϕ@ 200 C/C	10 x 20 ϕ 600 300 8 ϕ@ 200 C/C	8 x 20 ϕ 600 300 8 ϕ@ 200 C/C	8 x 12 ϕ 600 300 8 ϕ@ 200 C/C
C9	250 x 1150	14 x 12 ϕ 1150 250 8 ϕ@ 200 C/C	14 x 12 ϕ 1150 250 8 ϕ@ 200 C/C	14 x 12 ϕ 1150 250 8 ϕ@ 200 C/C	14 x 12 ϕ 1150 250 8 ϕ@ 200 C/C
C10, C11,C14, C15, C16, C17, C19, C20	250 x 500	8 x 16 ϕ 500 250 8 ϕ@ 200 C/C	8 x 16 ϕ 500 250 8 ϕ@ 200 C/C	4 x 16 ϕ + 4 x 12 ϕ 500 250 8 ϕ@ 200 C/C	8 x 12 ϕ 500 250 8 ϕ@ 200 C/C
C12	250 x 800	10 x 16 ϕ 800 250 8 ϕ@ 200 C/C	800 250 8 ϕ@ 200 C/C	4 x 16 ϕ + 6 x 12 ϕ 800 250 8 ϕ@ 200 C/C	10 x 12 ϕ 800 250 8 ϕ@ 200 C/C
C18	250 x 875	10 x 16 ϕ 875 250 8 ϕ@ 200 C/C	10 x 16 ϕ 875 250 8 ϕ@ 200 C/C	4 x 16 ϕ + 6 x 12 ϕ 875 250 8 ϕ@ 200 C/C	10 x 12 ϕ 875 250 8 ϕ@ 200 C/C
C22	250 x 525	8 x 16 ϕ 525 250 8 ϕ@ 200 C/C	8 x 16 ϕ 525 250 8 ϕ@ 200 C/C	4 x 16 ϕ + 4 x 12 ϕ 525 250 8 ϕ@ 200 C/C	8 x 12 ϕ 525 250 8 ϕ@ 200 C/C
C13	650 x 650 x 250 x 250	10 x 20 ϕ + 2 x 12 ϕ 250 650 250 8 ϕ@ 200 C/C	10 x 20 ϕ + 2 x 12 ϕ 250 650 250 8 ϕ@ 200 C/C	10 x 20 ϕ + 2 x 12 ϕ 250 650 250 8 ϕ@ 200 C/C	10 x 12 ϕ 250 650 250 8 ϕ@ 200 C/C
C21	500 x 500 x 250 x 250	10 x 16 ϕ 250 500 250 8 ϕ@ 200 C/C	6 x 20 ϕ + 4 x 16 ϕ 250 500 250 8 ϕ@ 200 C/C	8 x 12 ϕ 250 500 250 8 ϕ@ 200 C/C	8 x 12 ϕ 250 500 250 8 ϕ@ 200 C/C
SC1	250 x 400	8 x 16 ϕ 400 250 8 ϕ@ 200 C/C	8 x 16 ϕ 400 250 8 ϕ@ 200 C/C	8 x 16 ϕ 400 250 8 ϕ@ 200 C/C	8 x 12 ϕ 400 250 8 ϕ@ 200 C/C

LEGEND FOR COL. REINF.

SYMBOL	ITEM
●	20 TOR
○	16 TOR
⊘	12 TOR

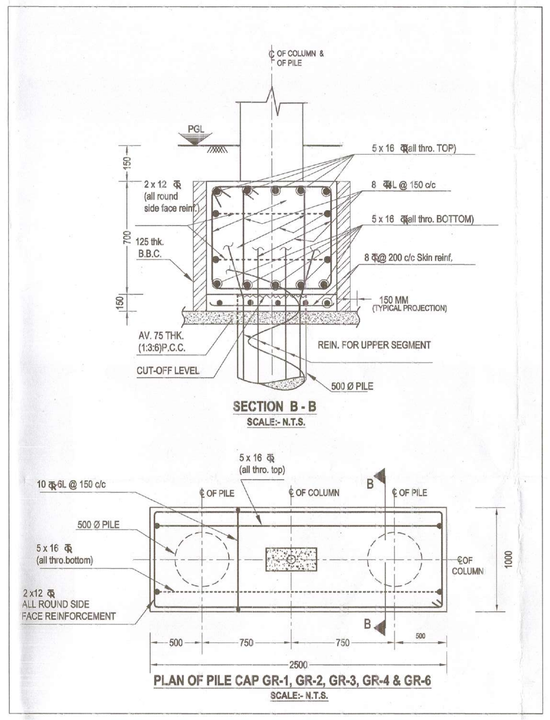

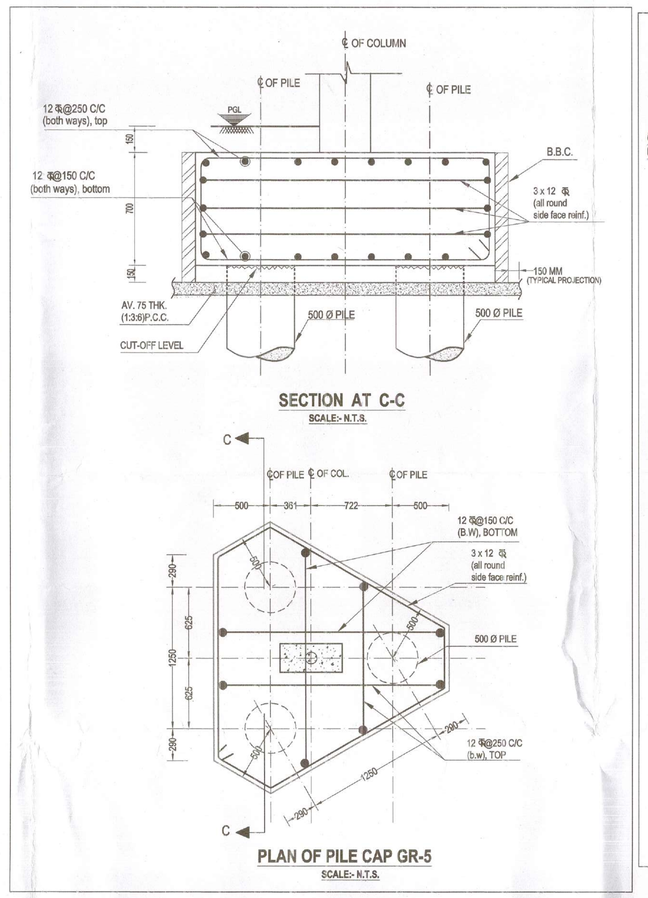

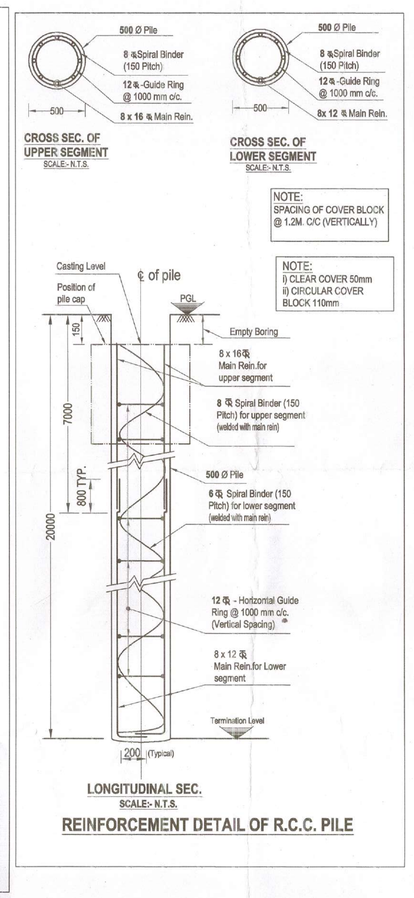

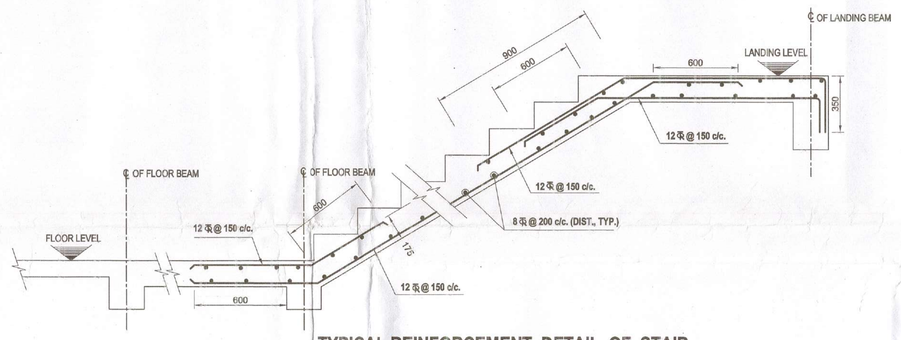

SCHEDULE OF R.C.C. FLOOR SLABS

SLAB MARKING	SLAB THKNESS (IN MM.)	LOCATION	REINFORCEMENT SHORTER SPACING & DIA AT SUPPORT	REINFORCEMENT SHORTER SPACING & DIA AT MID SPAN	REINFORCEMENT LONGER SPACING & DIA AT SUPPORT	REINFORCEMENT LONGER SPACING & DIA AT MID SPAN
S1	120	Top	8 ϕ @150 C/C.		8 ϕ @150 C/C	
		Bottom	8 ϕ @150 C/C.	8 ϕ @150 C/C.	8 ϕ @150 C/C.	8 ϕ @150 C/C.
CS1	140	Top	10 ϕ @100 C/C.	10 ϕ @100 C/C.	8 ϕ @150 C/C.	8 ϕ @150 C/C.
		Bottom	10 ϕ @100 C/C.	10 ϕ @100 C/C.	8 ϕ @150 C/C.	8 ϕ @150 C/C.
CS2	120	Top	8 ϕ @150 C/C.		8 ϕ @150 C/C.	
		Bottom	8 ϕ @150 C/C.	8 ϕ @150 C/C.	8 ϕ @150 C/C.	8 ϕ @150 C/C.

NOTES

1. CONTRACTOR TO CHECK & VERIFY ALL DIMENSIONS BEFORE EXECUTION OF WORK
2. ALL DIMENSIONS ARE IN MILLIMETER, UNLESS OTHERWISE MENTIONED.
3. ONLY FIGURED DIMENSIONS SHOULD BE FOLLOWED.
4. **GRADE OF STEEL USED IS Fe 500 TMT BAR AND GRADE OF CONCRETE IS M25.**
5. CLEAR COVER TO MAIN REINFORCEMENT TO
   (i) SLAB IS 20 MM. (ii) BEAM IS 35 MM.
   (iii) COLUMN IS 45 MM
   (iv) TIE BEAM IS 50 MM
   (v) PILE IS 50 MM
   (vi) PILE CAP IS 50 MM
6. LAP LENGTH TO BE CONSIDERED

DIA OF BAR	LAP LENGTH
6	300
8	400
10	500
12	600
16	800
20	1000
25	1250

7. PLAIN CEMENT CONCRETE WITH BRICK KHOA IN 1:3:6 RATIO.
8. WATER TIGHT SHUTTERING HAS TO BE ENSURED DURING CONSTRUCTION.
9. ALL SLAB MUST BE CAST MONOLYTHIC WITH SUPPORTING BEAM.
10. ALL OTHER SPECIFICATION ARE AS PER N.B.C. OF INDIA.
11. ALL PILES ARE R.C.C BORED CAST-IN-SITU METHOD DMC.
12. **CAPACITY OF PILE : 35 TON.**
13. ONE WORKING PILE SHOULD BE TESTED AS PER IS: 2911, Part - IV.
14. CUT OFF LEVEL OF PILE : 900 mm.
15. THIS DRAWING IS THE SOLE PROPERTY OF THE CONSULTANT & NO COPY OF IT SHOULD BE MADE WITHOUT THE WRITTEN PERMISSION FROM THE CONSULTANT.

I DO HEREBY DECLARE WITH FULL RESPONSIBILITY THAT :

I SHALL ENGAGE L.B.S. & E.S.E DURING CONSTRUCTION.
I SHALL FOLLOW THE INSTRUCTIONS OF L.B.S. & E.S.E. DURING CONSTRUCTION OF THE BUILDING (AS PER B.S. PLAN)
K.M.C. AUTHORITY WILL NOT BE RESPONSIBLE FOR STRUCTURAL STABILITY OF THE BUILDING & ADJOINING STRUCTURES.
IF ANY SUBMITTED DOCUMENTS ARE FOUND TO BE FAKE, THE K.M.C. AUTHORITY WILL REVOKE THE SANCTION PLAN.
THE CONSTRUCTION OF WATER RESERVOIR AND SEPTIC TANK WILL BE UNDER TAKEN UNDER THE GUIDANCE OF E.S.E./L.B.S. BEFORE STARTING OF BUILDING FOUNDATION WORK DURING DEPARTMENTAL INSPECTION, THE PLOT WAS IDENTIFIED BY US. THE PLOT IS BUTTED AND BOUNDED BY BOUNDARY WALL.

SUBRATA BHOWMICK
RAJENDRA BAITHA
SANJAY BOSE
JULIE BOSE
Partners of
SIGN CONSTRUCTION
C.A.of
RAJENDRA BAITHA
RAJA BAITHA
RATNA NASKAR (BAITHA)
SUBRATA BHOWMICK

SANJAY BOSE, JULIE BOSE, RAJENDRA BAITHA & SRI. SUBRATA BHOWMICK PARTNERS OF M/S SIGN CONSTRUCTION AND CONSTITUTED ATTORNEY OF
RAJA BAITHA,
RAJENDRA BAITHA,
SMT. RATNA NASKAR (BAITHA),
SUBRATA BHOWMICK

SIGN. OF OWNER

CERTIFIED WITH FULL RESPONSIBILITY THAT THE BUILDING PLAN HAS BEEN DRAWN UP AS PER PROVISION OF K.M.C. BUILDING RULES 2009 AS AMENDED FROM TIME TO TIME & THAT THE SITE CONDITION HAS BEEN MEASURED AND K.M.C. ROAD WIDTH 5.622 M. AVG. (NORTHERN SIDE) & 3.517 M AVG. (EASTERN SIDE) VERIFIED BY ME. IT IS A BUILDABLE SITE AND NOT A TANK OR FILLED UP TANK. THE LAND IS DEMARCATED BY BOUNDARY WALL. THE CONSTRUCTION OF U. G. WATER TANK AND SEPTIC TANK WILL BE COMPLETED BEFORE STARTING OF BUILDING FOUNDATION WORK. OWNER / APPLICANT SIGNATURE IDENTIFIED BY US. THE PLOT IS BEYOND 500 MT FROM E.M. BYE PASS.

KUNTAL DUTTA
B. Tech (Civil)
LBS-I / 1299
The Kolkata Municipal Corporation

KUNTAL DUTTA
L.B.S.NO. - 1299 / I

SIGN. OF L.B.S.

THE STRUCTURAL DESIGN & DRAWINGS BOTH THE FOUNDATION & SUPER STRUCTURE OF THE BUILDING HAS BEEN MADE BY ME CONSIDERING ALL POSSIBLE LOAD INCLUDING THE SEISMIC LOAD AS PER N.B.C, OF INDIA & CERTIFIED THAT IT IS SAFE & STABLE IN ALL RESPECTS.

KUNTAL DUTTA
B. TECH (CIV'L)
ESE-/I/451
THE KOLKATA MUNICIPAL CORPORATION

KUNTAL DUTTA
E.S.E. NO. - 451 / II

SIGN. OF E.S.E.

UNDERSIGNED HAS INSPECTED THE SITE AND CARRIED OUT SOIL INVESTIGATION THEREON. IT IS CERTIFIED THAT THE EXISTING SOIL OF THE SITE IS ABLE TO CARRY THE LOAD COMING FROM THE PROPOSED CONSTRUCTION AND THE FOUNDATION SYSTEM PROPOSEDHEREIN IS SAFE & STABLE IN ALL RESPECT FROM GEO-TECHNICAL POINT OF VIEW.

Gopal Chandra Das
B. E (Civil), CE, M.Tech, MIGS - 1M4111
(Soil Mech & Foundation Engg. IIT Kgp.)
Regn. No.- GTER/NKDA/10/00046
KMC Empanelled No. 17/I. Class-I

GOPAL CHANDRA DAS
G.T. NO.- I / 17

SIGN. OF GEO - TECH. ENG.

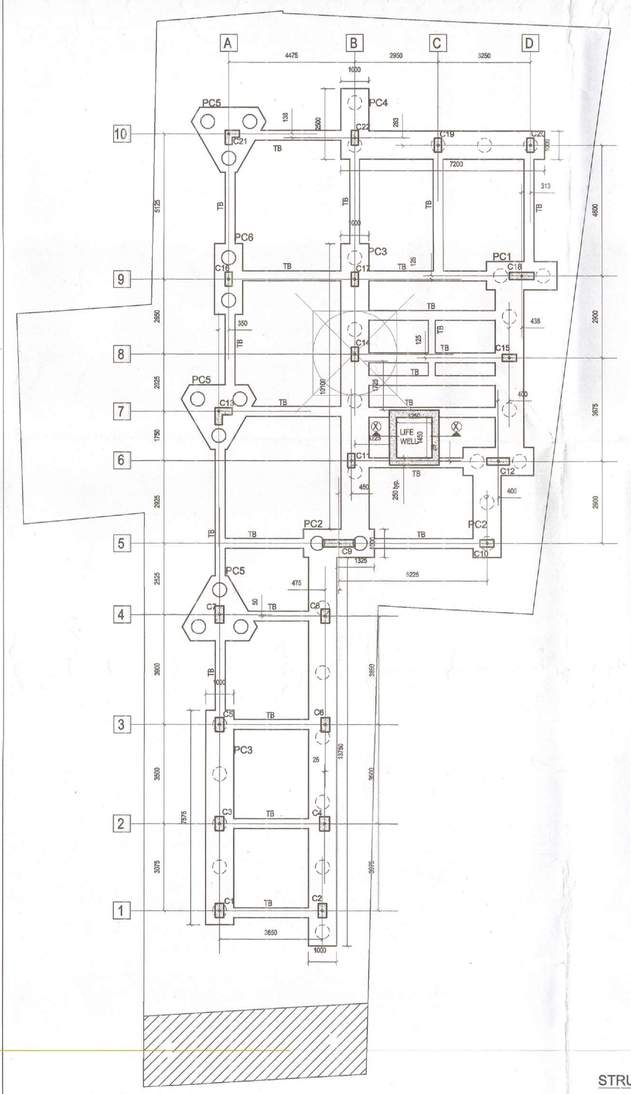

STRUCTURAL PLAN AT GR. LEV.
(showing column, tie beam ,pile & pile cap markings)
SCALE 1:100

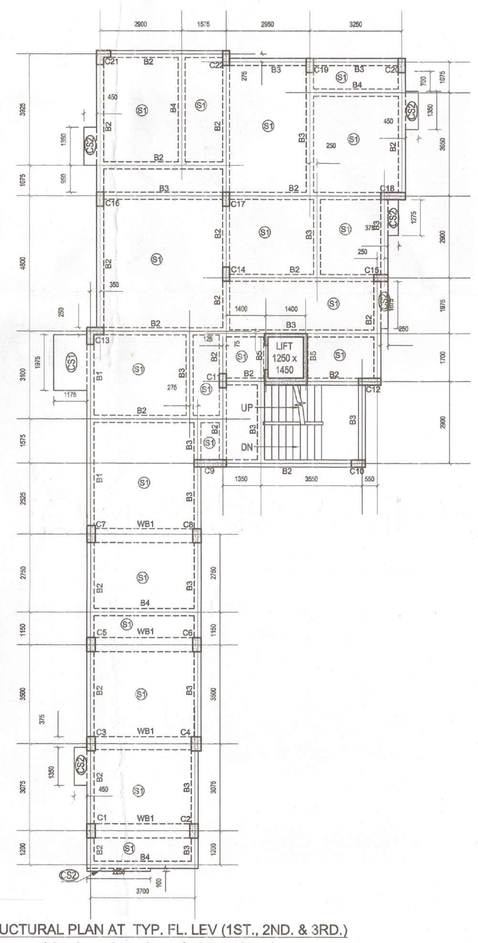

STRUCTURAL PLAN AT TYP. FL. LEV (1ST., 2ND. & 3RD.)
(showing column, beam & slab markings)
SCALE 1:100

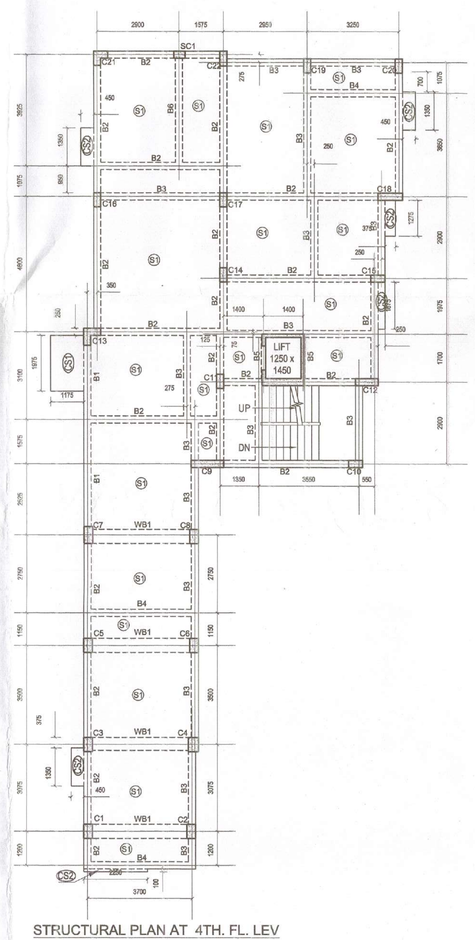

STRUCTURAL PLAN AT 4TH. FL. LEV
(showing column, beam & slab markings)
SCALE 1:100

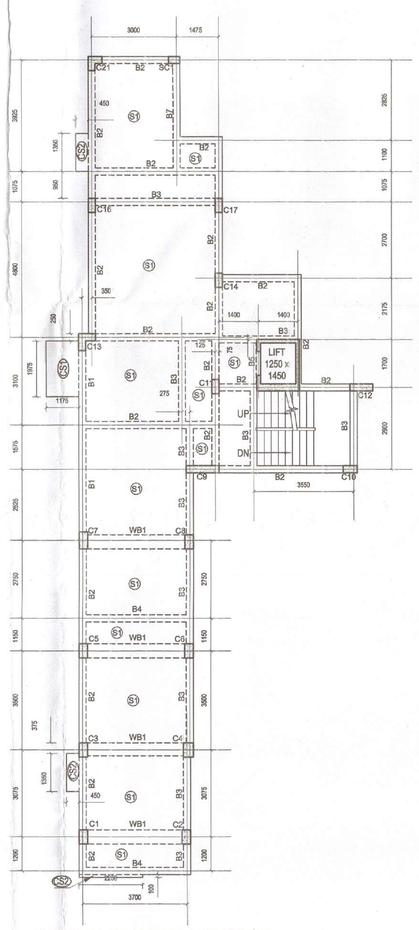

STRUCTURAL PLAN AT ROOF LEV
(showing column, beam & slab markings)
SCALE 1:100

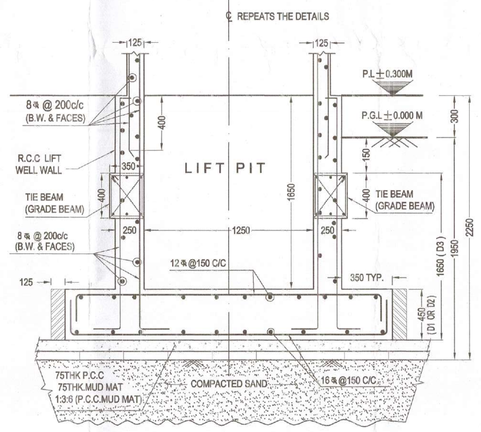

SECTION "X-X"
(R.C.C DETAIL OF LIFT WELL)
SCALE - N.T.S

PROPOSED STRUCTURAL PLAN OF A G+IV (FOUR) STORIED RESIDENTIAL BUILDING (HEIGHT - 15.425 M.) AT K.M.C. PREMISES NO.- 290, RABINDRAPALLY, BLOCK - D, WARD NO.- 101, BR. NO. - XII, R.S. DAG NO - 621,634, R.S. KHATIAN NO - 112,419, MOUZA - BADEMASUR, J.L. NO. - 31, P.S.- PATULI,KOLKATA - 700 086. DIST. - SOUTH 24 PARGANAS, U/S 393A OF K.M.C. ACT 1980, BUILDING RULE - 2009

CERTIFIED COPY

Structural plan and design calculation as submitted by the structural engineer have been kept with B.P. No. 2020120250 Date 25-11-2020 for record of the Kolkata Municipal Corporation without verification No. deviation from the submitted structural plan should be made at the time of erection without submitting fresh structural plan along with design calculation and stability certificate in the prescribed form, necessary steps should be taken for the safetyof the adjoining premises public and private properties and safety of human life during construction.

sd/- sd/-

EXECUTIVE ENGINEER/ASSTT.ENGINEER

BOROUGH NO. — XII

KOLKATA MUNICIPAL CORPORATION

BUILDING DEPARTMENTS

CERTIFIED COPY OF B.S. PLAN

No. 2020/20250 Dt. 25-11-2020

Borough No. XII

Assistant Engineer   Executive Engineer

2019/20287.

Building Department Borough - XII

RECEIVED

DATE 23/11/2020

The Kol. Mpl. Corporation